ETSEIB

HARDWARE SECURITY IN EMBEDDED SYSTEMS
Code – 230989

Course Project

CPA Attack to Embedded AES Algorithm

Co-funded by the Erasmus+ Programme of the European Union

UPC

Outline

- Course project calendar and timings
- Course project overview
- Information leakage
- Basics of the AES CPA attack
- Experimental CPA attack setup
- Provided files explanation
- What is expected from students
- Project report/presentation/delivery
- Hands on session

Co-funded by the Erasmus+ Programme of the European Union

Calendar and timings overview

Hardware Sercurity on Embedded Systems 2025/2026 (spring)

	TU Feb 17	TH Feb 19	TU Feb 24	TH Feb 26	TU Mar 03	TH Mar 05	TU Mar 10	TH Mar 12	TU Mar 17	TH Mar 19	TU Mar 24	TH Mar 26	TU Apr 07	TH Apr 09	TU Apr 14	TH Apr 16	TU Apr 21	TH Apr 23	TU Apr 28	TH Apr 30	TU May 05	TH May 07	TU May 12	TH May 14
12:00																								
12:30		HSES Module I (RRM)		HSES Module I (SAM)		HSES Module I (SAM)		HSES Module II (SAM)		HSES Module II (SAM)		HSES Module II (SAM)		Intro-Final Work (AGP)		HSES Module III (DAD)		HSES Module III (DAD)		HSES Module III (DAD)		APPLUS IT-LAB (David)		HSES Presenta-tions
13:00																								
14:00		Session 1		Session 2		Session 3		Session 4		Session 5		Session 6		Session 7		Session 8		Session 9		Session 10		Session 11		Session 12
14:30		Group 40		Group 40		Group 40		Group 40		Group 40		Group 40		Group 40		Group 40		Group 40		Group 40		Group 40		Group 40
15:00		Room		Room		Room		Room		Room		Room		Room		Room		Room		Room		Room		Room
15:30	HSES Module I (RRM)	A4103	HSES Module I (SAM)	A4103	HSES Module I (SAM)	A4103	HSES Module II (SAM)	A4103	HSES Module II (SAM)	A4103	HSES Module II (SAM)	A4103	Intro-Final Work (AGP)	A4103	HSES Module III (DAD)	A4103	HSES Module III (DAD)	A4103	HSES Module III (DAD)	A4103	APPLUS IT-LAB (David)	A4103	HSES Presenta-tions	A4103
16:00																								
17:00	Session 1		Session 2		Session 3		Session 4		Session 5		Session 6		Session 7		Session 8		Session 9		Session 10		Session 11		Session 12	
17:30	Group 30		Group 30		Group 30		Group 30		Group 30		Group 30		Group 30		Group 30		Group 30		Group 30		Group 30		Group 30	
18:00	Room		Room		Room		Room		Room		Room		Room		Room		Room		Room		Room		Room	
18:30	A4103		A4103		A4103		A4103		A4103		A4103		A4103		A4103		A4103		A4103		A4103		A4103	
19:00																								

CURRENT WEEK
2026/04/06

COURSE PROJECT
PRESENTATION DELIVERY
WEEK 2026/05/04

COURSE PROJECT
DEFENSE/QUESTIONS
WEEK 2026/05/11

Work in teams

Project teams spreadsheet
already opened/available

Co-funded by the
Erasmus+ Programme
of the European Union

Information leakage in physical implementations

- Encryption algorithms are mathematically secure
- Black box model
- When it comes to a physical implementation not that much secure
- Grey box model

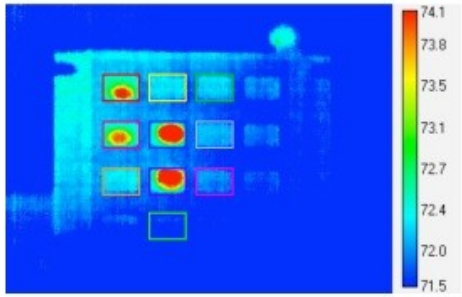

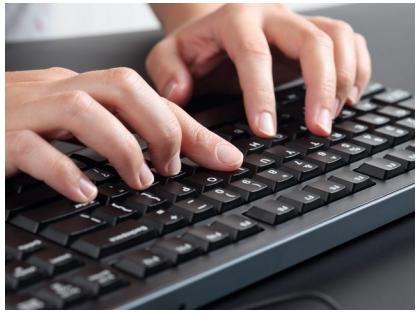

SIDE CHANNEL ATTACKS (SCA)

Co-funded by the Erasmus+ Programme of the European Union

Side channel attacks (SCA) in embedded systems

- Many possible information leakage sources
- Acoustic
- Electromagnetic
- Power consumption
- ...

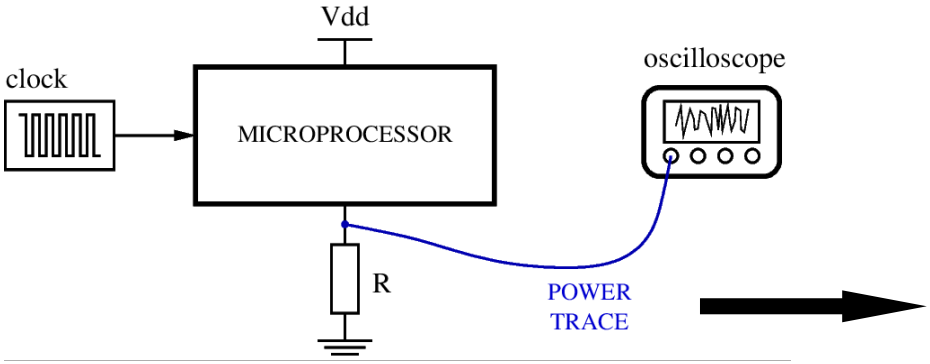

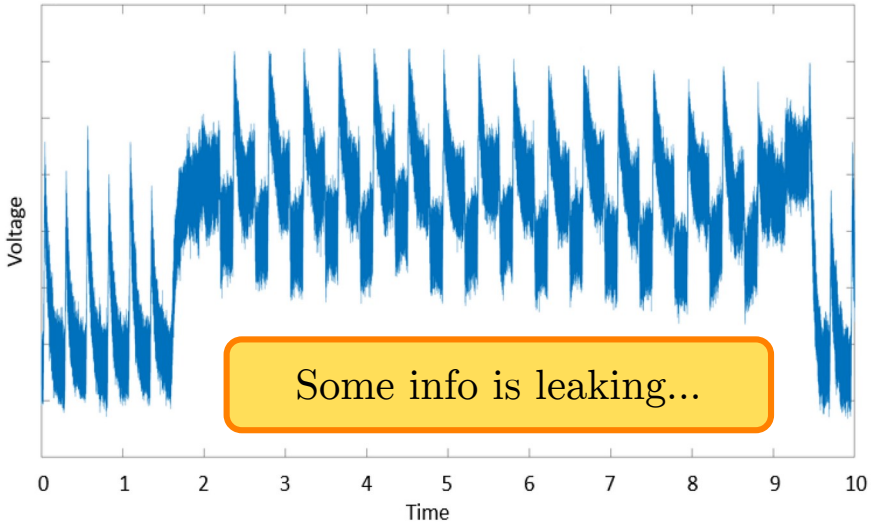

Co-funded by the
Erasmus+ Programme
of the European Union

HSES course project context and goal

- Provided captured power consumption traces
- Microcontroller running 128-bit AES encryption algorithm
- GOAL: find out the AES 128-bit key

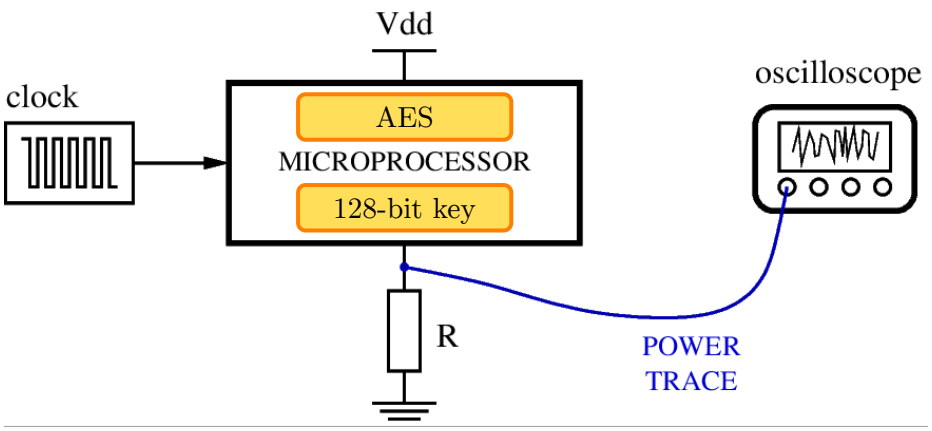

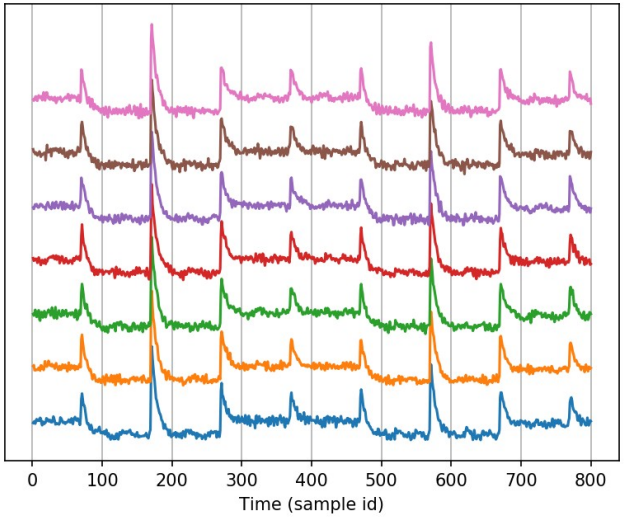

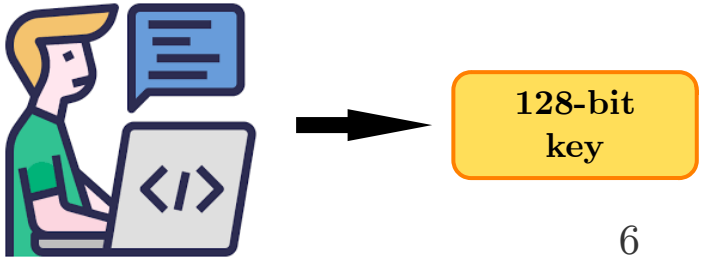

Co-funded by the
Erasmus+ Programme
of the European Union

AES algorithm (128 bits)

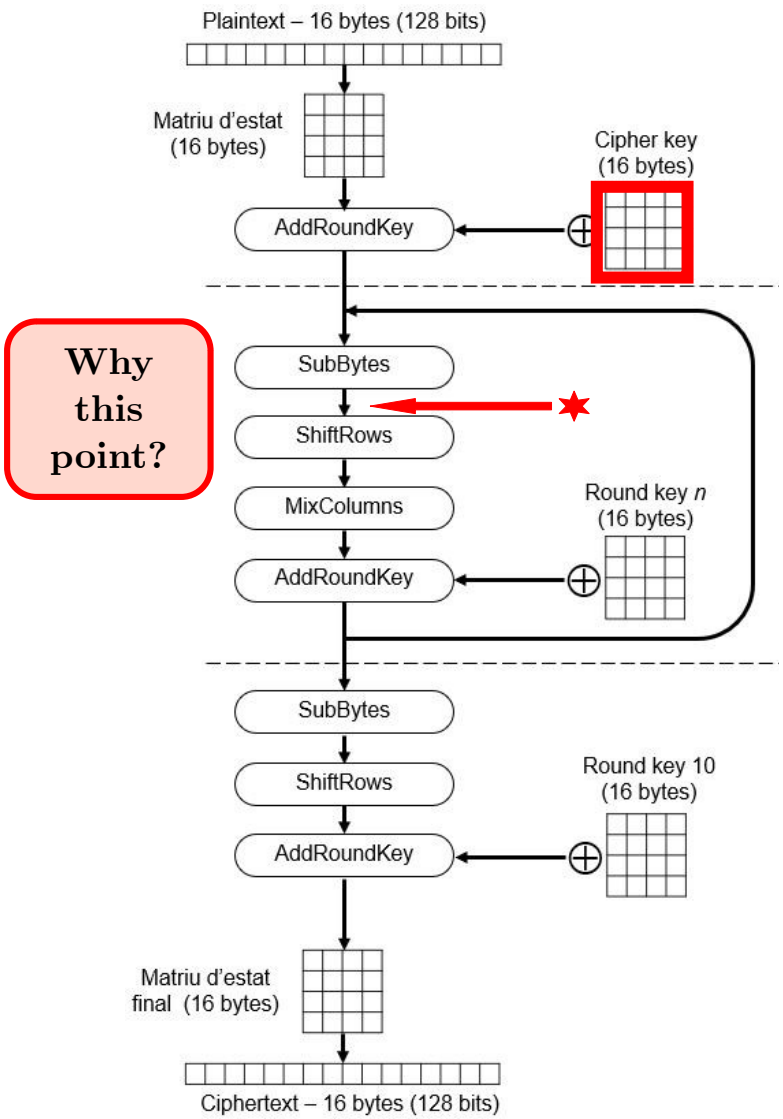

Why this point?

ADD ROUND KEY

04	e0	48	28
66	cb	f8	06
81	19	d3	26
e5	9a	7a	4c

$\oplus$

a0	88	23	2a
fa	54	a3	6c
fe	2c	39	76
17	b1	39	05

$=$

a4	68	6b	02
9c	9f	5b	6a
7f	35	ea	50
f2	2b	43	49

SUB-BYTES (SBOX)

	0	1	2	3	4	5	6	7	8	9	A	B	C	D	E	F
0	63	7C	77	7B	F2	6B	6F	C5	30	01	67	2B	FE	D7	AB	76
1	CA	82	C9	7D	FA	59	47	F0	AD	D4	A2	AF	9C	A4	72	C0
2	B7	FD	93	26	36	3F	F7	CC	34	A5	E5	F1	71	D8	31	15
3	04	C7	23	C3	18	96	05	9A	07	12	80	E2	EB	27	B2	75
4	09	83	2C	1A	1B	6E	5A	A0	52	3B	D6	B3	29	E3	2F	84
5	53	D1	00	ED	20	FC	B1	5B	6A	CB	BE	39	4A	4C	58	CF
6	D0	EF	AA	FB	43	4D	33	85	45	F9	02	7F	50	3C	9F	A8
7	51	A3	40	8F	92	9D	38	F5	BC	B6	DA	21	10	FF	F3	D2
8	CD	0C	13	EC	5F	97	44	17	C4	A7	7E	3D	64	5D	19	73
9	60	81	4F	DC	22	2A	90	88	46	EE	B8	14	DE	5E	0B	DB
A	E0	32	3A	0A	49	06	24	5C	C2	D3	AC	62	91	95	E4	79
B	E7	C8	37	6D	8D	D5	4E	A9	6C	56	F4	EA	65	7A	AE	08
C	BA	78	25	2E	1C	A6	B4	C6	E8	DD	74	1F	4B	BD	8B	8A
D	70	3E	B5	66	48	03	F6	0E	61	35	57	B9	86	C1	1D	9E
E	E1	F8	98	11	69	D9	8E	94	9B	1E	87	E9	CE	55	28	DF
F	8C	A1	89	0D	BF	E6	42	68	41	99	2D	0F	B0	54	BB	16

Co-funded by the Erasmus+ Programme of the European Union

Why this specific point for the attack?

Memory transactions are responsible for a considerable power consumption (bus lines)

The attack point is pretty well close to the key without any permutation, i.e. not very diffused or masked

SBOX provides a great amount of randomness spoiling correlation if the key is not the correct one

Co-funded by the Erasmus+ Programme of the European Union

AES CPA attack fundamentals

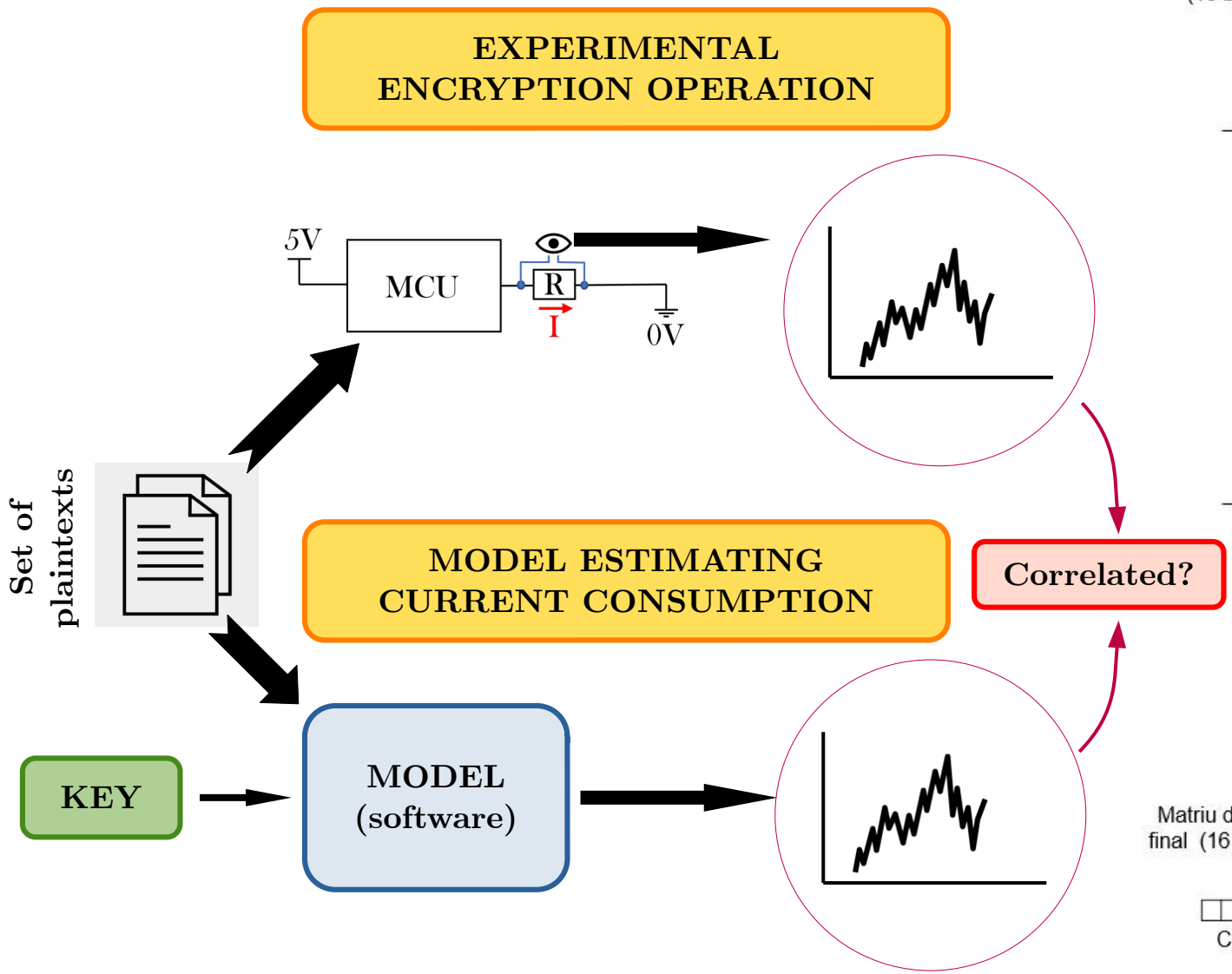

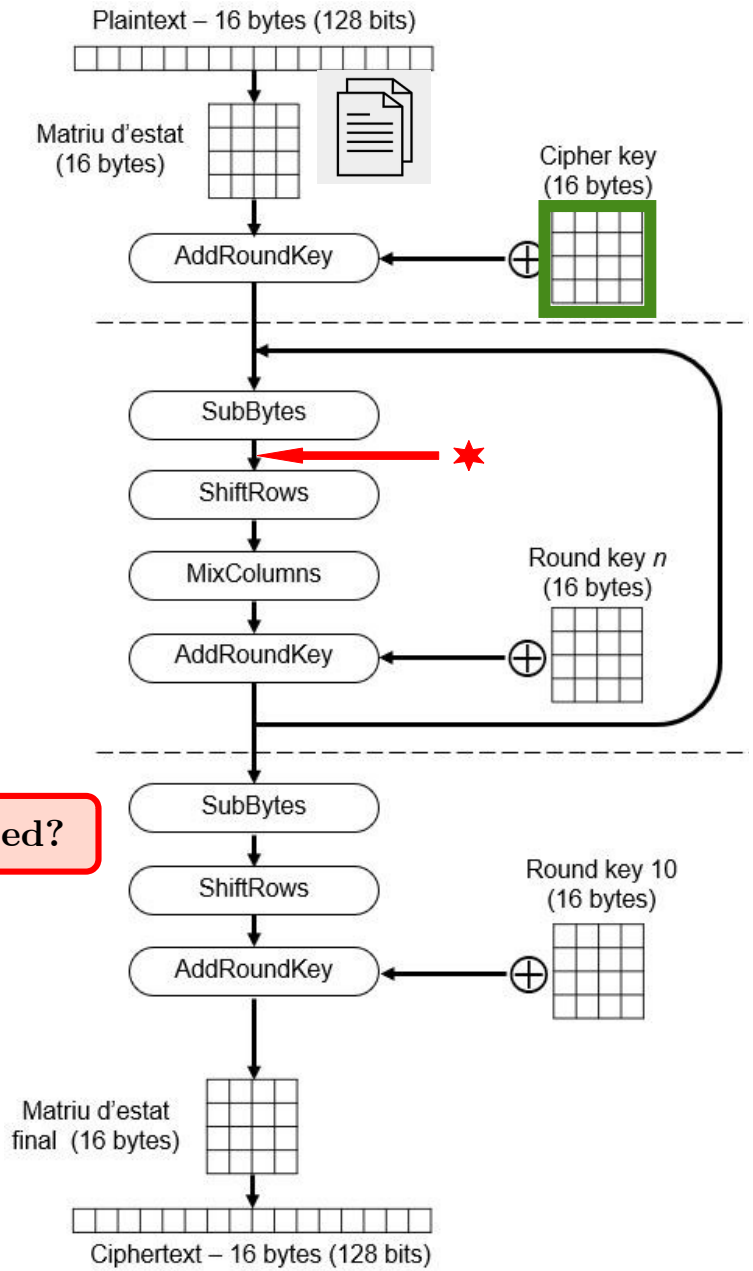

Co-funded by the
Erasmus+ Programme
of the European Union

Power consumption model (HW)

- Data buses are a major source of current consumption due to large capacitances and large buffering stages
- Power is proportional to the number of active lines in the bus
- Hamming weight model

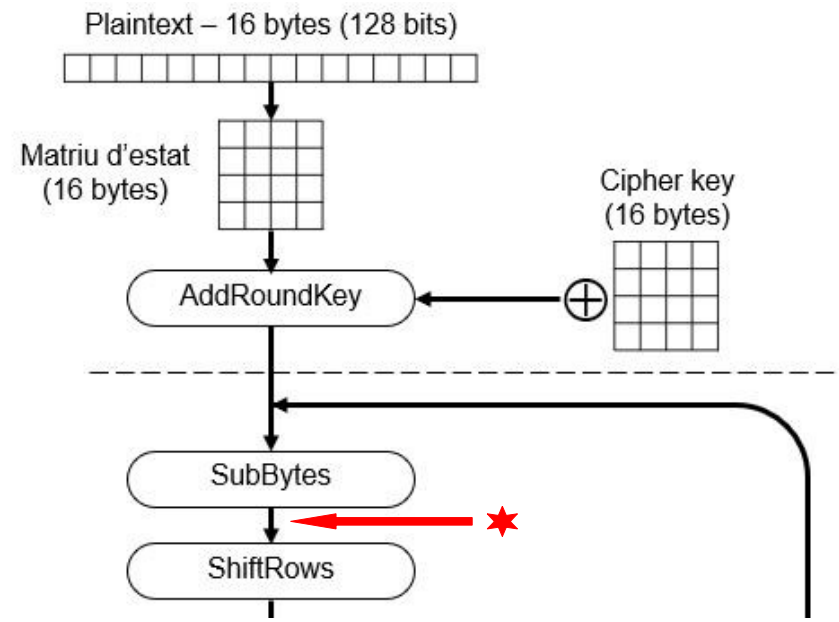

MMC0	0x00	0x01	0x02	...	0xFE	0xFF
P0 plaintext 1	2	4	3	...	4	1
P0 plaintext 2	3	4	4	...	5	2
P0 plaintext 3	1	3	2	...	6	3
...	...	...	...	...	...	...
P0 plaintext 150	2	5	4	...	6	3

POWER ∝ HW(SBOX (P ⊕ K))

HW MODEL ESTIMATING CURRENT CONSUMPTION

Co-funded by the Erasmus+ Programme of the European Union

Experimental measurement setup

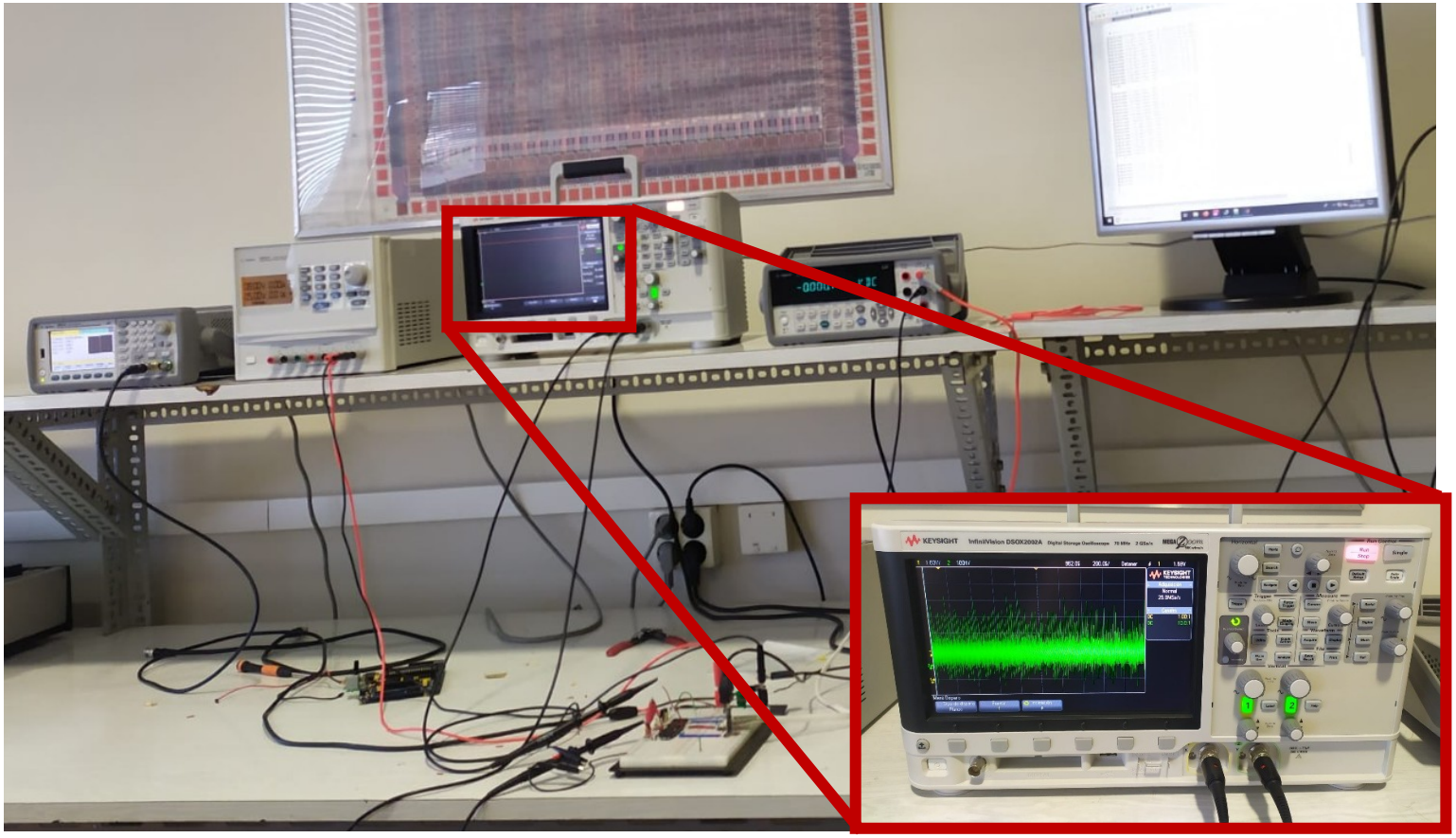

Co-funded by the
Erasmus+ Programme
of the European Union

Experimental lab measurement setup

- Prototype setup
- PIC18F4520 microcontroller running at 250 kHz, 5 V supply voltage
- Current measurement resistor of 100 Ohms
- Oscilloscope sampling at a rate of 25 Msamples/s
- Serial connection to apply the plaintexts and guesses for the byte keys

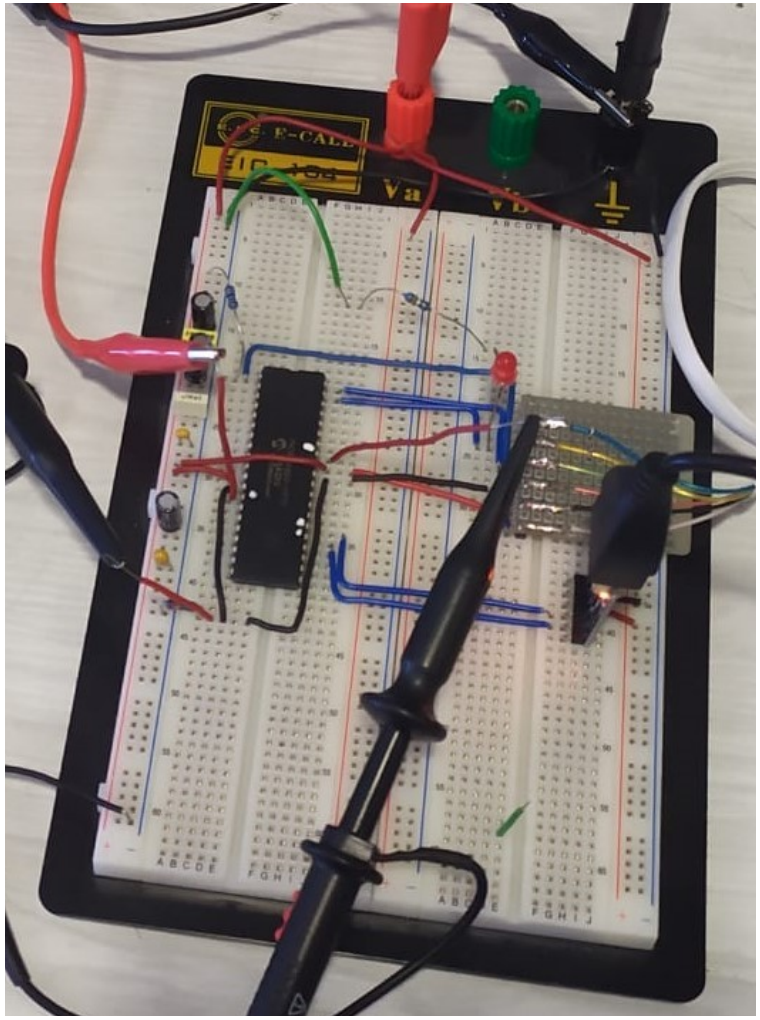

Co-funded by the Erasmus+ Programme of the European Union

Experimental current traces

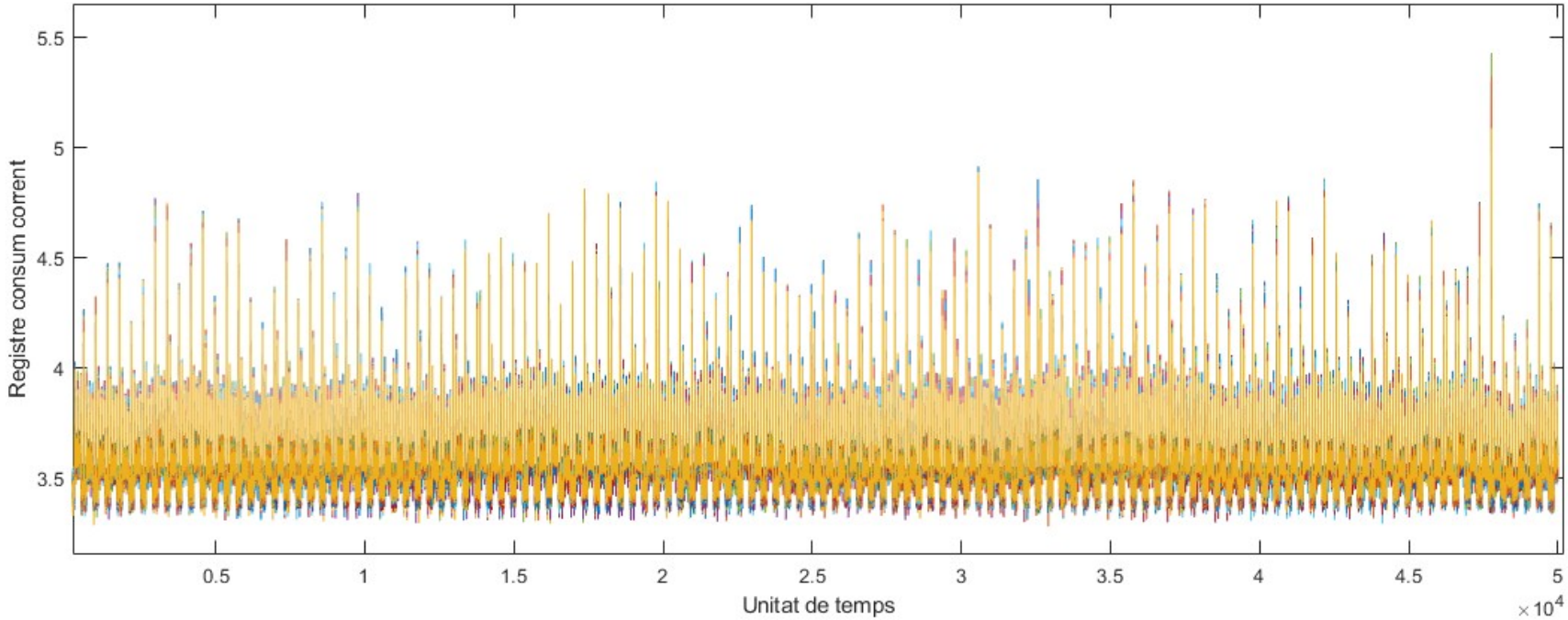

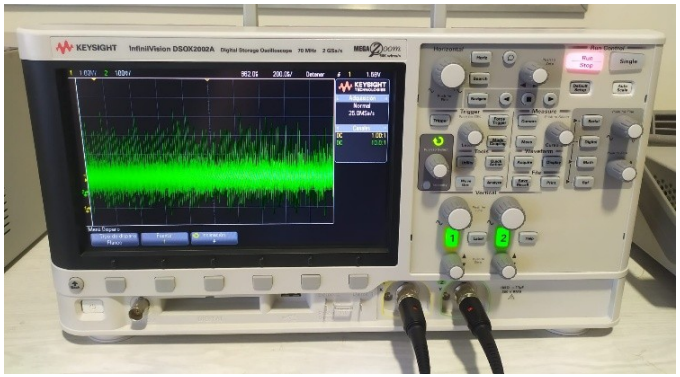

MCE0	t1	t2	t3	t4	...	t50000
P0 plaintext 1	36045	35184	35637	36732	···	35473
P0 plaintext 2	31292	34241	5415	35676	···	30907
P0 plaintext 3	34856	32412	36545	37684	···	34251
···	···	···	···	···	···	···
P0 plaintext 150	30012	34789	31243	33212	···	30784

EXPERIMENTAL CURRENT CONSUMPTION

Co-funded by the Erasmus+ Programme of the European Union

Correlation power analysis

EXPERIMENTAL CURRENT CONSUMPTION

MCE0	t1	t2	t3	t4	...	t50000
P0 plaintext 1	36045	35184	35637	36732	...	35473
P0 plaintext 2	31292	34241	5415	35676	...	30907
P0 plaintext 3	34856	32412	36545	37684	...	34251
...	...	...	...	...	...	...
P0 plaintext 150	30012	34789	31243	33212	...	30784

HW MODEL ESTIMATING CURRENT CONSUMPTION

MMC0	0x00	0x01	0x02	...	0xFE	0xFF
P0 plaintext 1	2	4	3	...	4	1
P0 plaintext 2	3	4	4	...	5	2
P0 plaintext 3	1	3	2	...	6	3
...	...	...	...	...	...	...
P0 plaintext 150	2	5	4	...	6	3

COLUMN-WISE CORRELATION (TAKE ABS)

This matrix corresponds to the provided files (as is)

CORRELATION MATRIX

MCB0	0x00	0x01	0x02	...	**0x54**	...	0xFE	0xFF
t1	0,1	0,3	0,1	...	0,1	...	0,2	0,2
t2	0,1	0,1	0,2	...	0,1	...	0,2	0,1
...	...	...	...	...	...	...	...	...
*t**	0,2	0,4	0,1	...	**0,9**	...	0,1	0,3
...	...	...	...	...	...	...	...	...
t50000	0,1	0,1	0,2	...	0,1	...	0,1	0,2

These two need to be built by you

BINGO!

This for every byte

Co-funded by the Erasmus+ Programme of the European Union

Provided files description

Files are accessible through Google Drive shared folder

→ The file `cleartext.txt`, of 150 lines and 16 columns, contains the 150 plaintexts of 16 bytes fed to the AES encryption algorithm implemented in the microcontroller.

→ The file `trace{N}.txt`, of 150 lines and 50000 columns, contains the current consumption traces for every plaintext during the time span the byte {N} of the key is used in the first key addition and first SBox. Each line is a trace made up of 50000 oscilloscope samples. The units of the current consumption traces are arbitrary.

→ The file `clock{N}.txt`, of 150 lines and 50000 columns, if present, contains the microcontroller clock signal acquisition corresponding to each of the previously described current consumption traces.

Current/voltage units within the files are arbitrary, yet proportional to the measured signal. The sampling time is uniform in all the provided files.

Two datasets are provided:
(1) Easier, well clocked
(2) Harder, not well clocked

Co-funded by the Erasmus+ Programme of the European Union

Provided files description

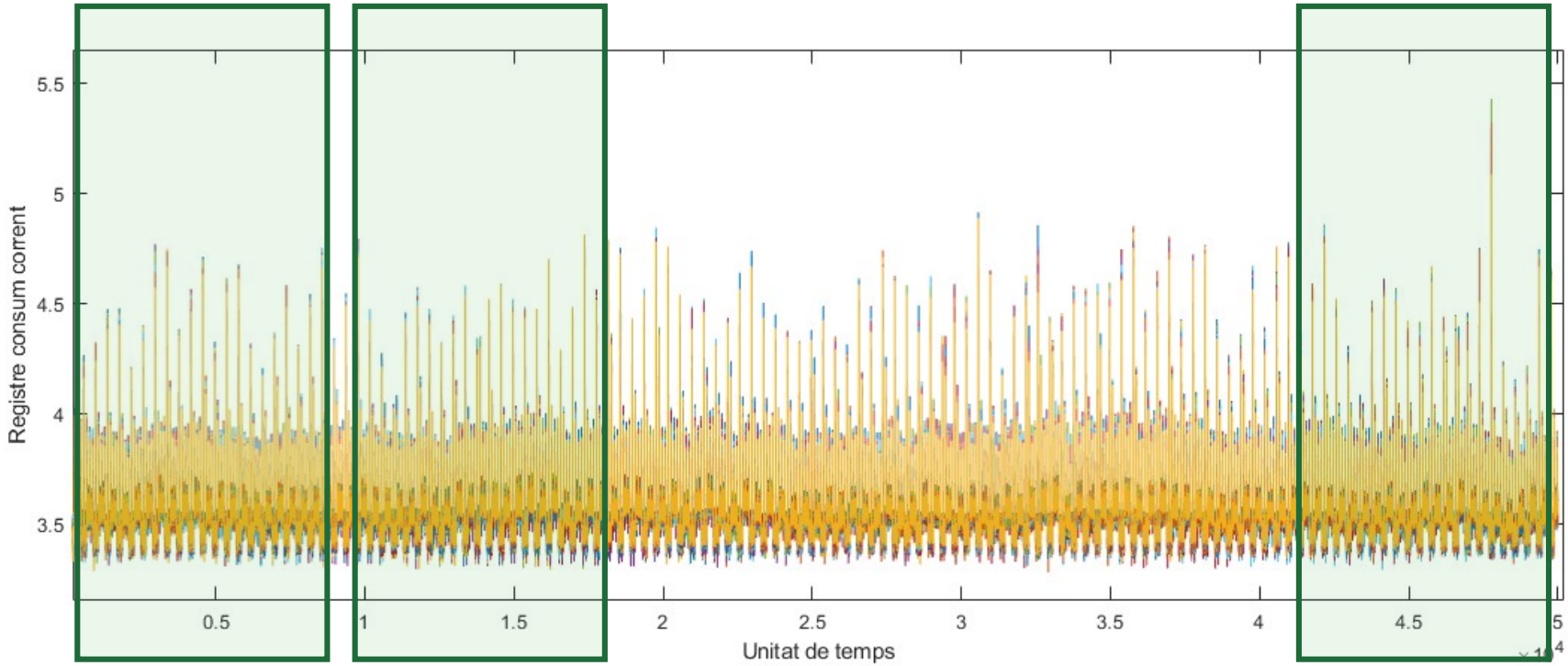

Byte 0	Byte 1	Byte 15
trace0.txt	trace1.txt	trace15.txt

You can think of sequential byte acquisition in time

Co-funded by the Erasmus+ Programme of the European Union

Course project delivery

PRESENTATION

- Record a 10 minute video presentation explaining the project
- All the members are expected to participate
- Basically explain what you have done
- Support yourself on slides
- Introduce the names of the whole team member's at the very begining
- In the last session you will be called for a 15 minute question session regarding your project/presentation

REPORT

- Written report should not exceed 10-12 pages
- Basically explain what you have done
- Frame the project
- Goal: retrieve the keys
- Report all the steps you have taken as well as difficulties/observations
- Show results/data you have obtained/analyzed
- Draw conclusions

Co-funded by the Erasmus+ Programme of the European Union

Some final hints/recommendations

→ Do not leave it until the end of the course.
→ Be sure to understand the information contained within each file and the conditions of the experiment. A plot may help to figure it out.
→ The CPA attack can be implemented in any language of your choice.
→ Start with dataset 1. When done, you can tackle dataset 2.
→ Maybe the first step to deal with dataset 2 is to analyze the clock signals.
→ Once finished and just to check if it went ok, the summation of the 16 bytes of the key for datasets 1 and 2 are, respectively, 1712 and 1434.

KEY BYTES ADDITION (CHECKSUM)

1st dataset: 1712
2nd dataset: 1434

Co-funded by the Erasmus+ Programme of the European Union